REVISION RECORD			
LTR	ECO NO:	APPROVED:	DATE:

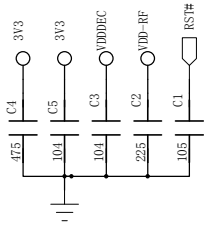

滤波电容靠近芯片

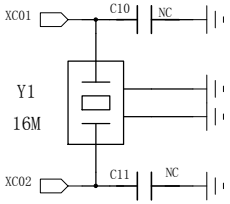

晶振

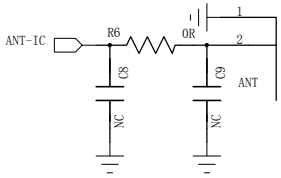

天线

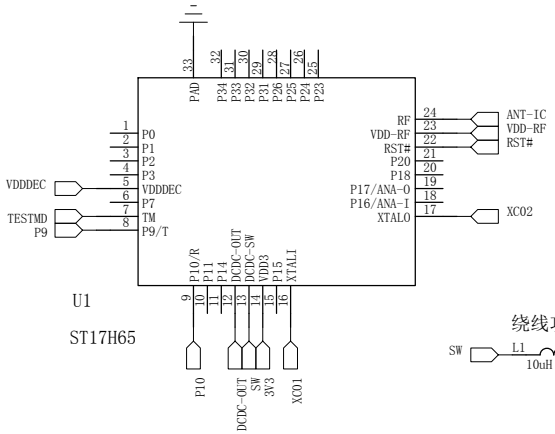

U1

ST17H65

蓝牙主控

绕线功率电感，300mA

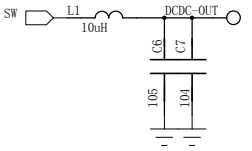

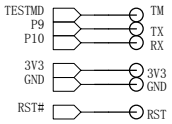

烧录点

DRAWN:	DATED:
CHECKED:	DATED:
QUALITY CONTROL:	DATED:
RELEASED:	DATED:

COMPANY:

TITLE:

ST17H65原理图

CODE:	SIZE:	DRAWING NO:	REV:
	A3		1

SCALE:

SHEET: 1 OF 1